2J9237
2J9237A
2J9237AB
(Datasheet)

Type	Marine Antenna
Frequencies	GPS (1575.42 MHz) GLONASS (1592 - 1610 MHz) AIS (162 MHz)
Mounting	Any Surface
Revision	00

P. Tipul D.Noble

1. PRODUCT SELECTOR

2J9237 complete model with bottom bracket
2J9237A without bracket
2J9237B body mount version
2J9237AB with components what can change version 2J9237A to body mount version

2. SPECIFICATION

2.1. Electrical Specifications

Navigation (Cable 1)

Frequencies	GPS/GLONASS (1572 – 1610 MHz)
Impedance	50 Ohms
Polarization	RHCP
LNA Gain	23dB at 3V and 24dB at 5V
VSWR	<1.2:1
Voltage supply	2,7V - 5,5V
Current	15 mA to 25 mA
Power (max.)	138mW
Operating temperature	-40°C to +85°C
Note	Antenna is filtered

AIS (Cable 2)

Frequencies	AIS (162 MHz)
Impedance	50 Ohms
Polarization	Linear
VSWR	<2:1
Power handling	25W
Operating temperature	-40°C to +85°C

2.2. Connection Specifications

Cable 1(Navigation)
Connector type: FME female
Cable type: RG58W (White)
Cable length: 10m

Cable 2(AIS)
Connector type: FME female
Cable type: RG58W (White)
Cable length: 10m

- Cable length is part of antenna tuning and is not recommended to change it but if you need different connector type please ask our sales team

2.3. Mechanical Specifications and Dimensions

2.3.1. 2J9237

Material:	ABS
Max. dimensions:	248mm x 110mm x 74mm (H x L x W)
Colour:	White (for different colours please ask our sales team)

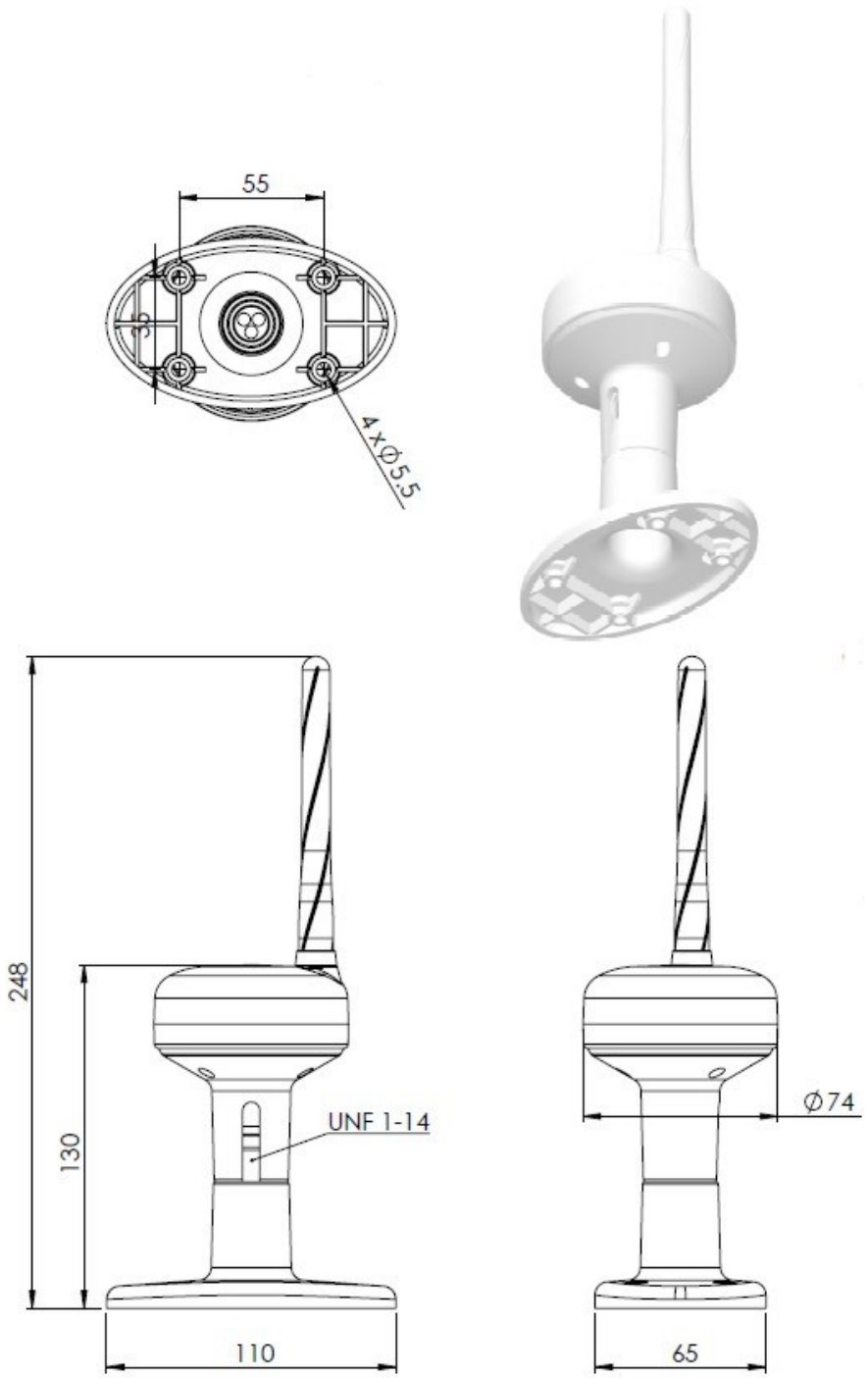

2.3.2. 2J9237A

Material:	ABS
Max. dimensions:	200mm x 74mm (H x D)
Colour:	White (for different colours please ask our sales team)

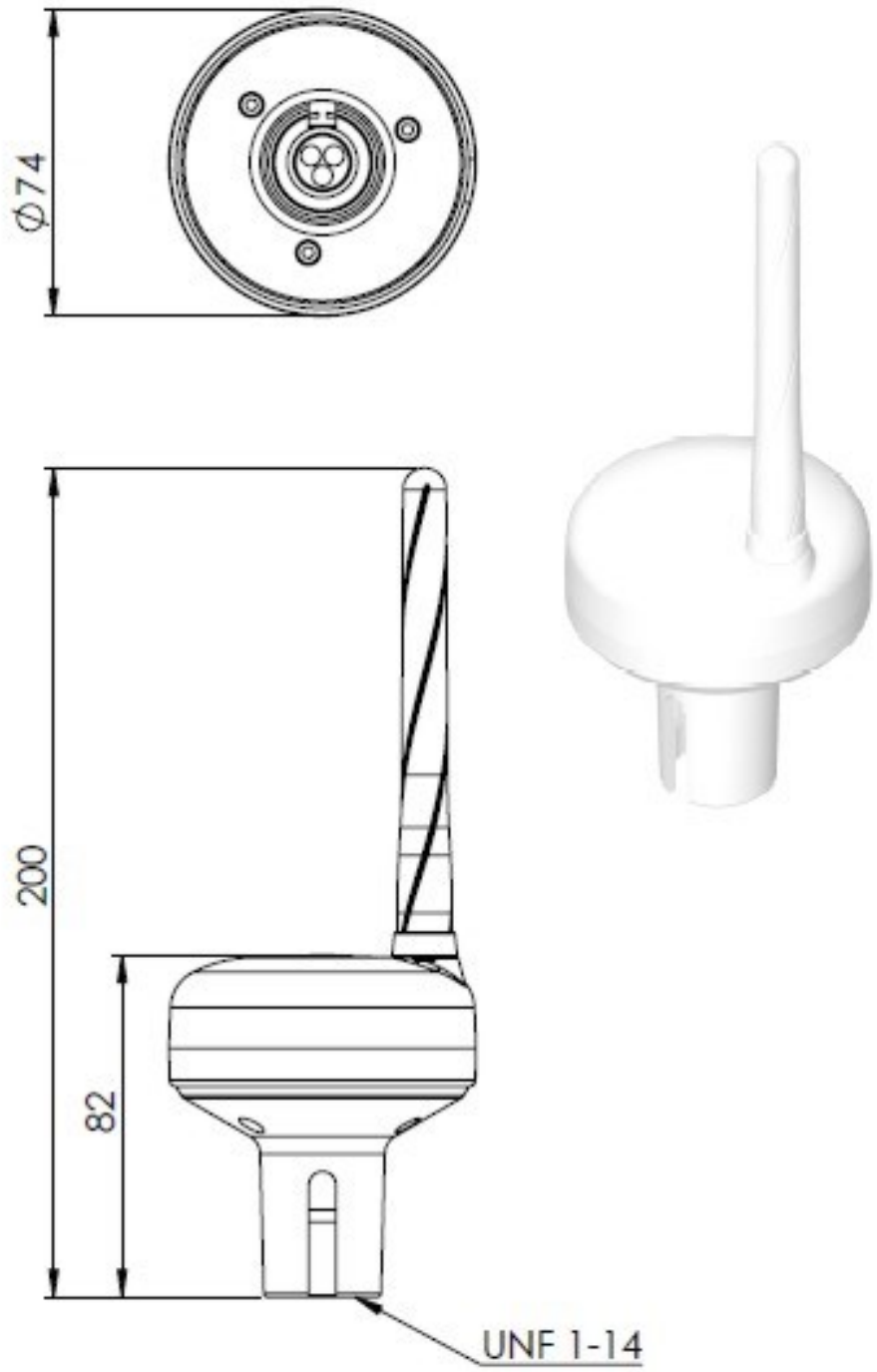

2.3.3. 2J9237B

Material:	ABS
Max. dimensions:	151.9mm x 74mm (H x D)
Colour:	White (for different colours please ask our sales team)

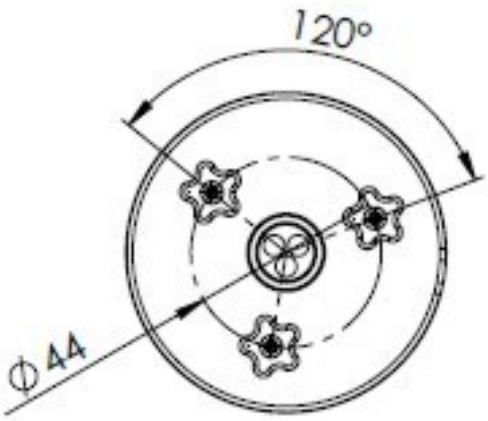

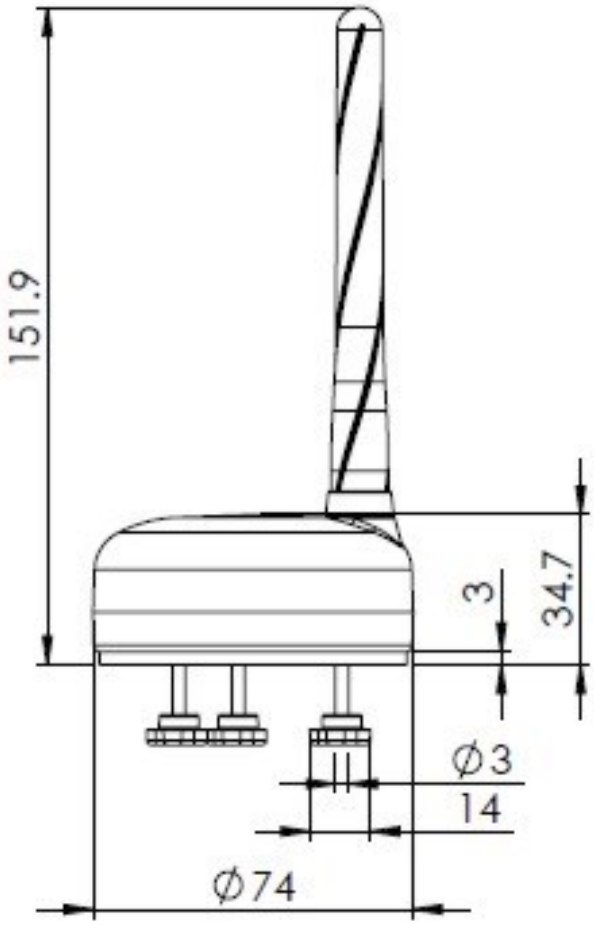

2.3.4. 2J9237AB

Material:	ABS
Max. dimensions:	34.9mm x 74mm (H x D)
Colour:	White (for different colours please ask our sales team)

AB version mean that's antenna is sold with all parts needed for making body mount version from version 2J9237A, by unscrewing bottom part and putting 3x M3 DIN 916 screw to bottom part and sticking 3mm sticker to bottom side.

Cable can go straight down or can be placed in 90 degree in slot placed at bottom side of housing.

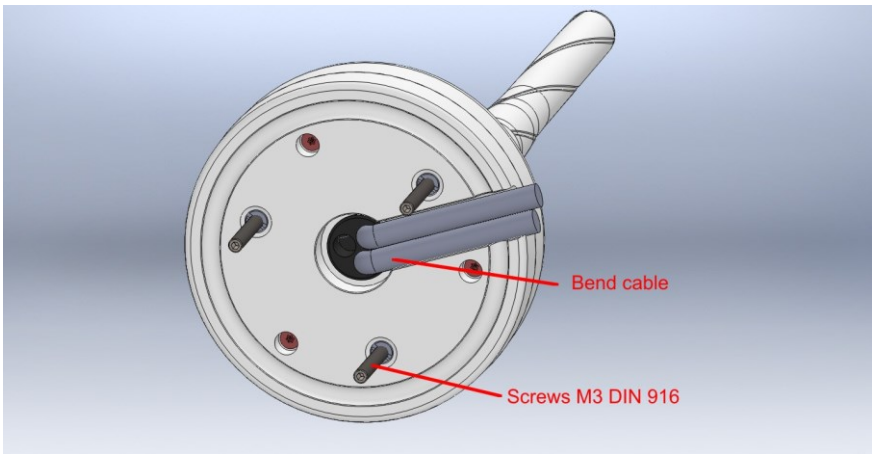

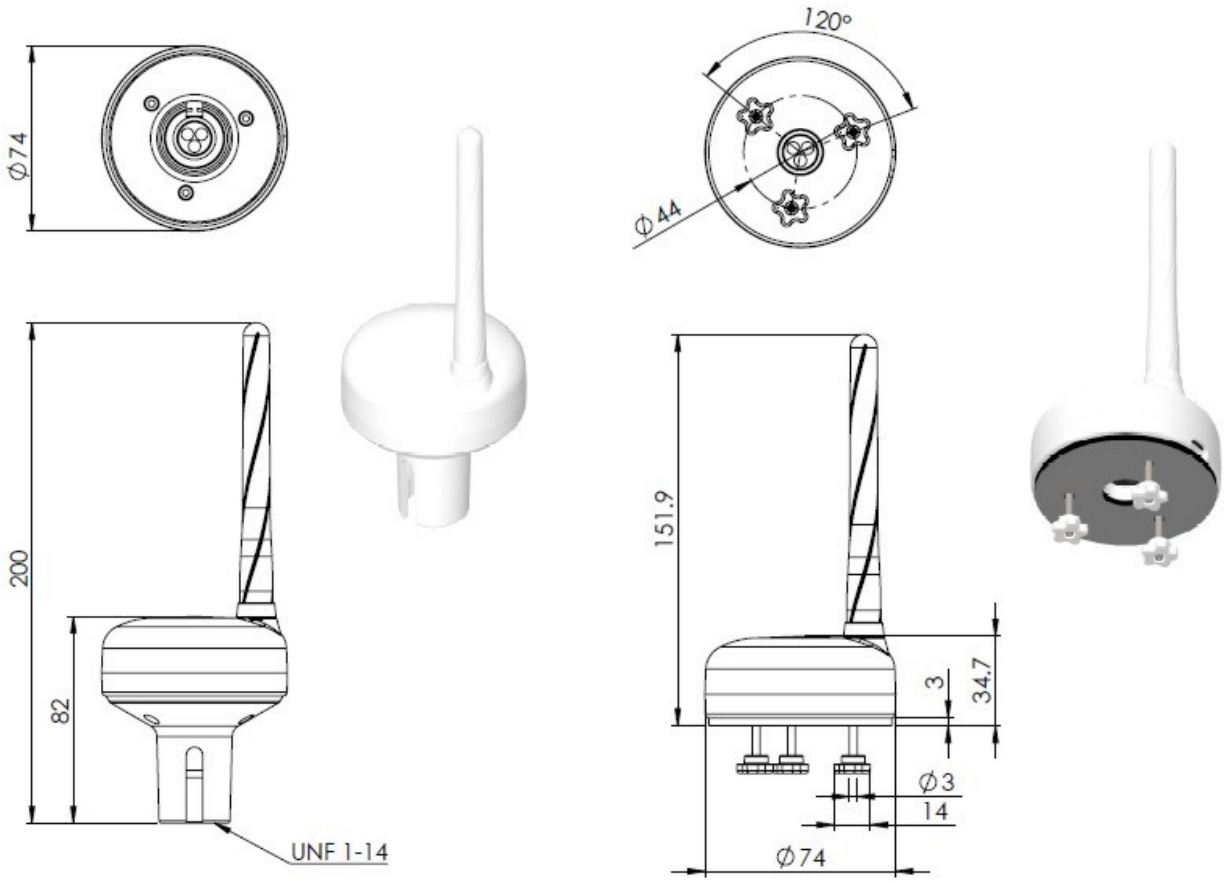

3. MEASUREMENT

- Antenna was tested with 30cm of RG58 in anechoic chamber

3.1. GNSS

3.1.1. Antenna Gain (S21)

Log Mag (GNSS) at 3V

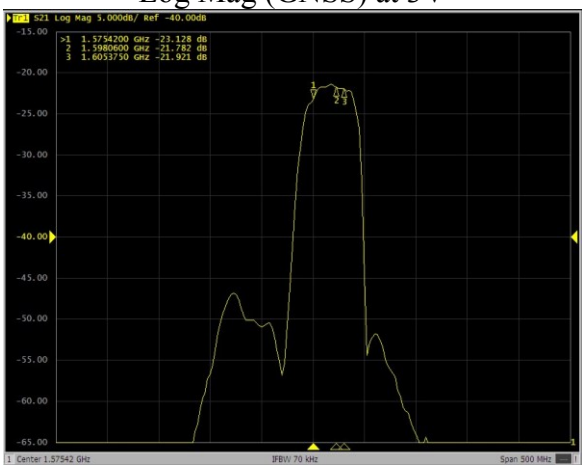

Log Mag (GNSS) at 5V

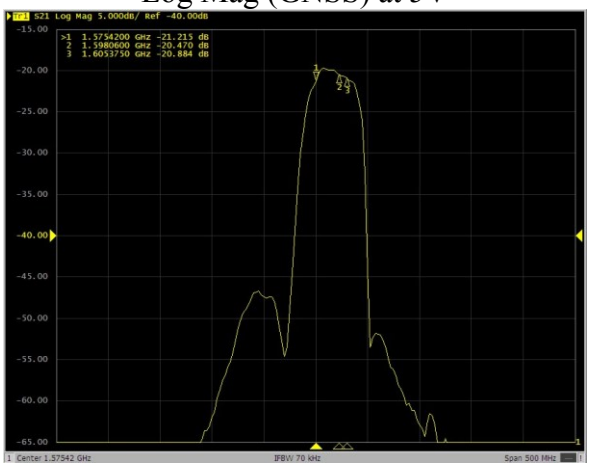

3.1.2. 3D radiation pattern

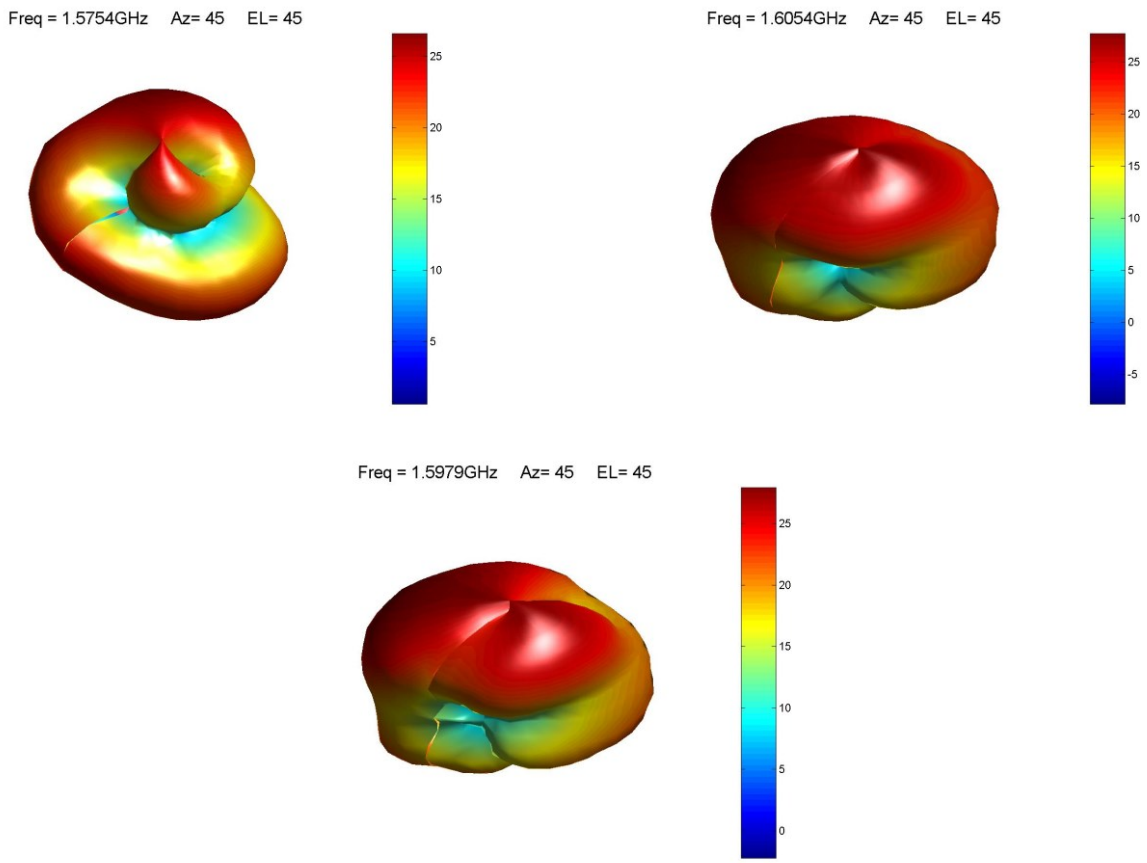

Figure 1- 3D spherical chart for center frequency

3.2. AIS

3.2.1. Real test

Boat Star Trust was tracked at that time of testing AIS antenna. Measured distance to this boat was 18.5nm

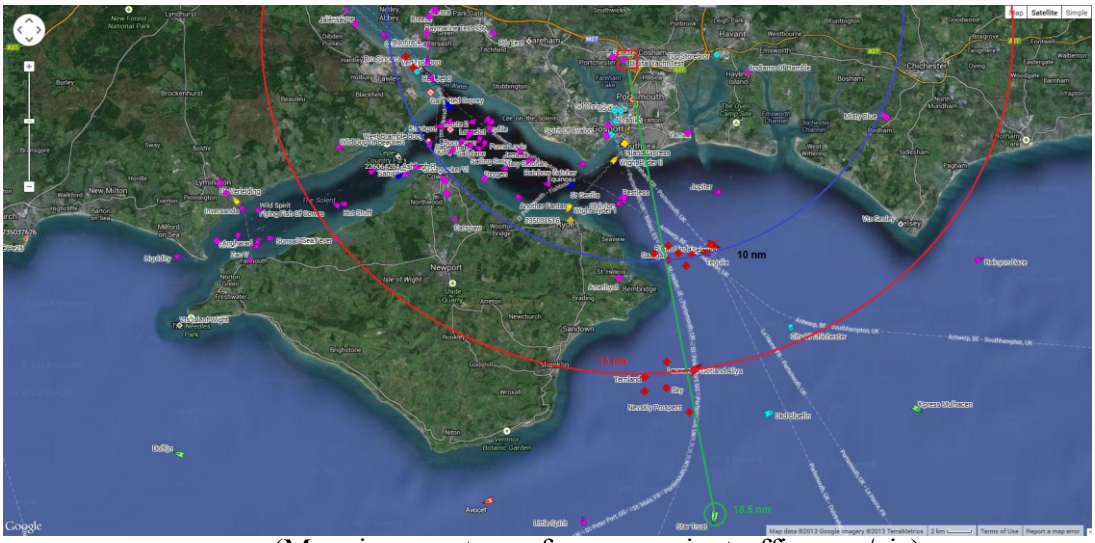

(Mapping courtesy of www.marinetraffic.com/ais)

3.2.2. S11
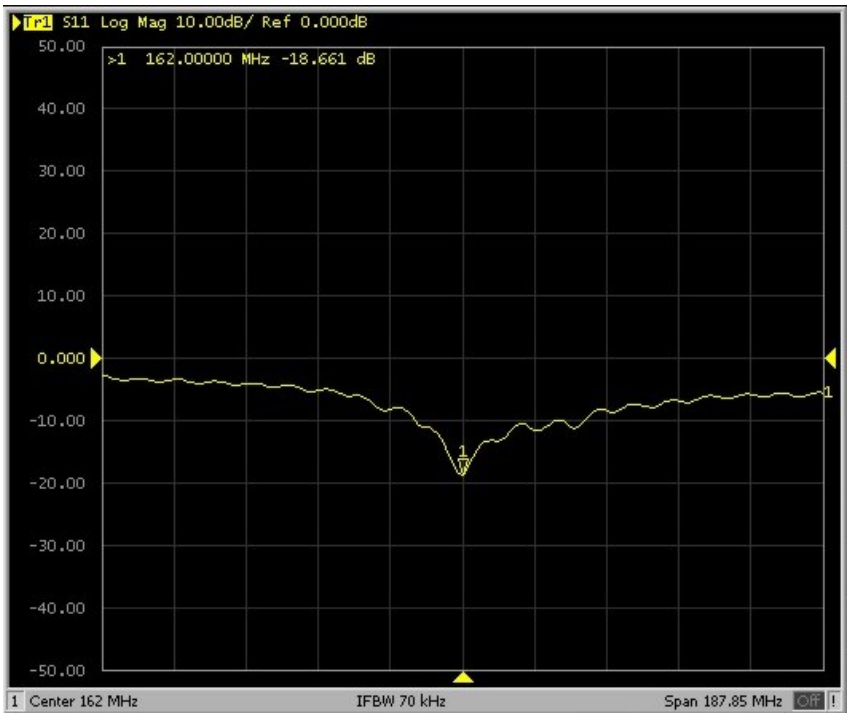
- Antenna was measured with 10m of RG58