NO.(ECN)	Revision	Description	Date	Revised

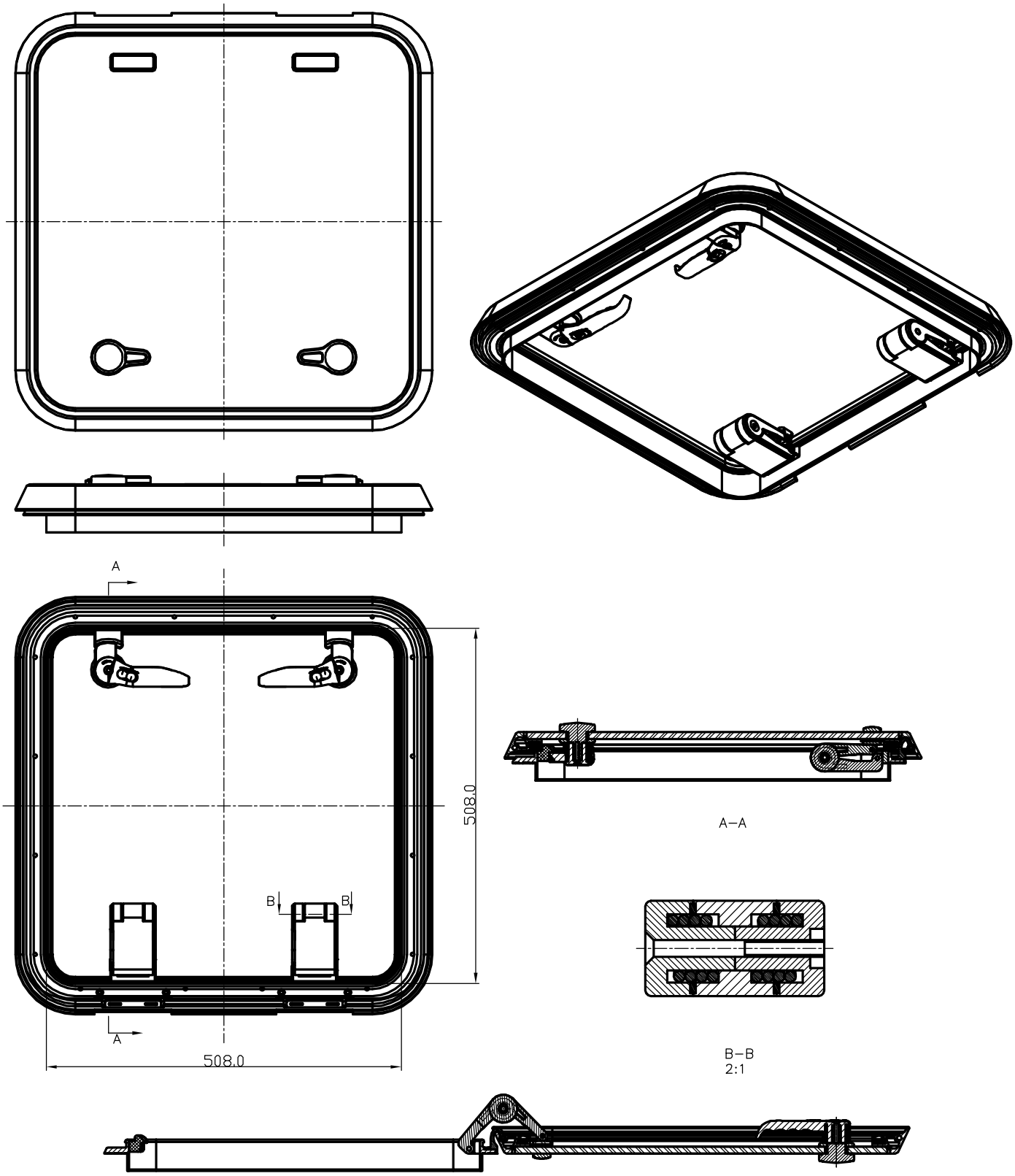

Unless otherwise specified; tolerances are:
1. Wall Thickness = ±5%
2. Angles = ±2°
3. Profile dimensions fit : ISO JS13

★ *INDICATES "CRITICAL TO QUALITY" DIMENSION*

REMOVE BURRS AND SHARP CORNERS 0.10-0.25

Bainbridge International Ltd

508x508 天窗组装图/
508x508 Square Hatch Flange base(Assembly)

Drawn: Z.H.D.	Date: 20090917			
Checked:	Date:	M'TL:	Scale: 1:8	DWG. NO.: 09136AAB25
Approved:	Date:	Weight: g	Dimensions: M/M	
Projection: A4V		Finish:	SHEET 1 OF 1	Customer's No.: SIZE 60